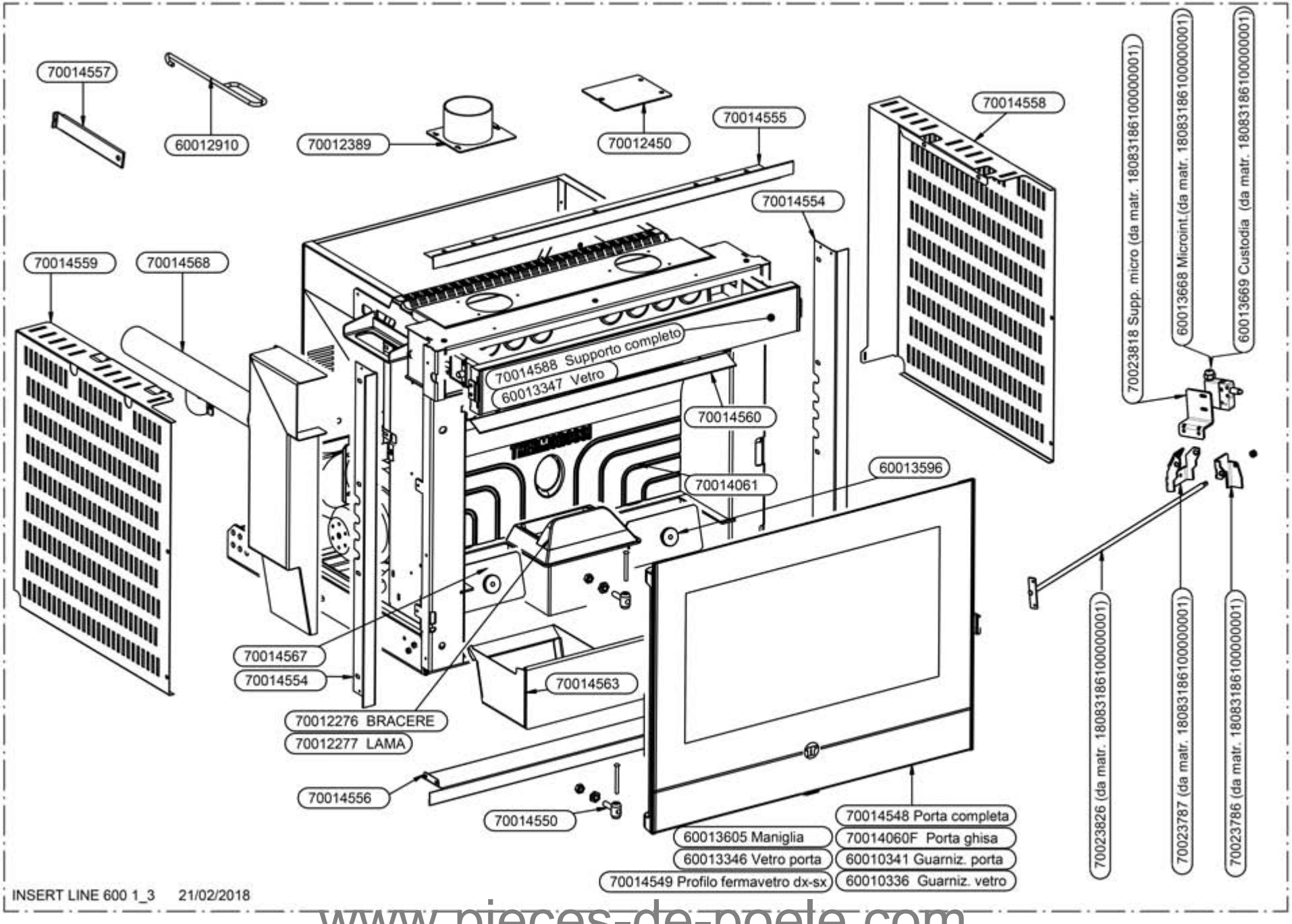

INSERT LINE 600 1_3 21/02/2018

www.pieces-de-poele.com

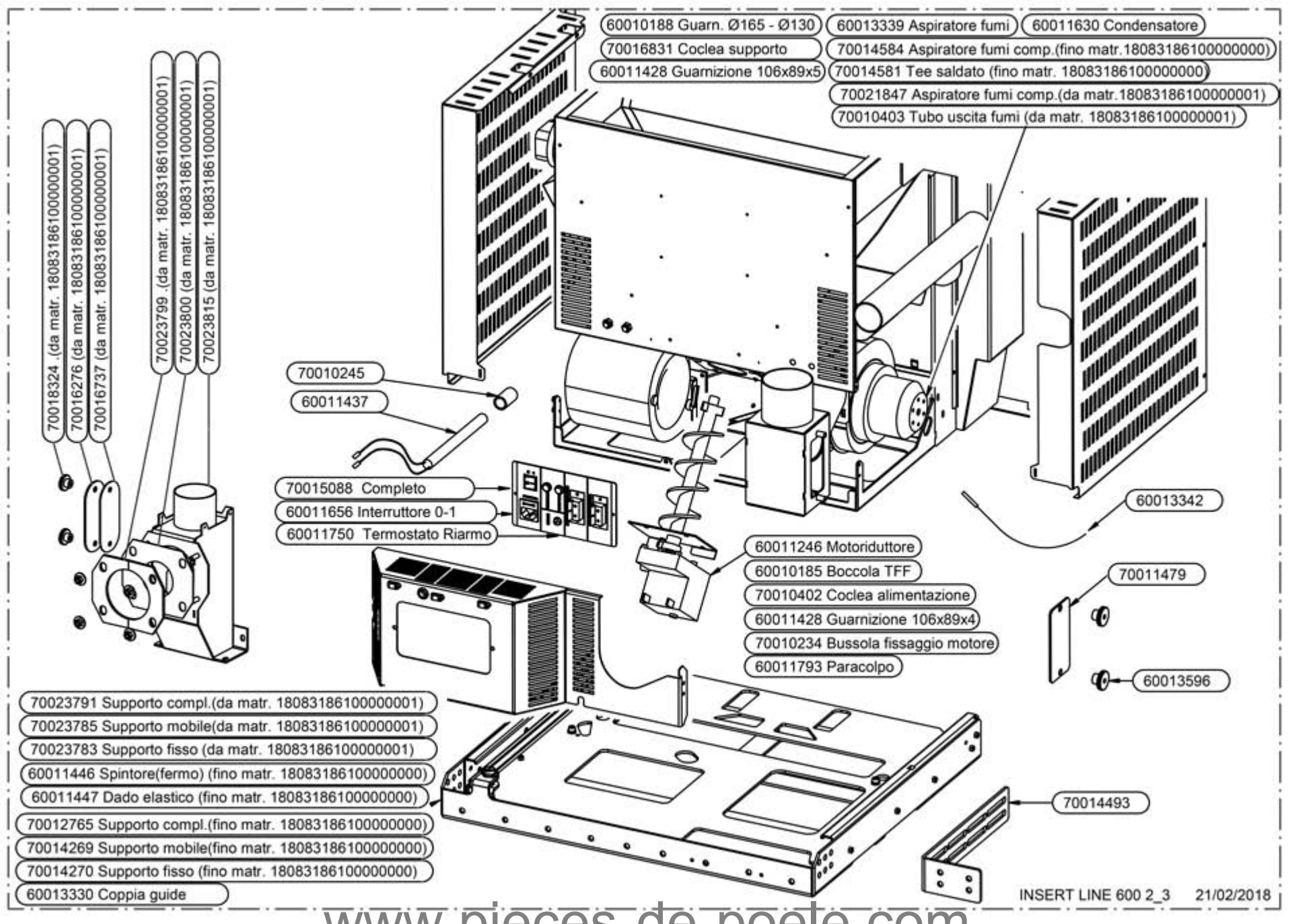

www.pieces-de-poele.com

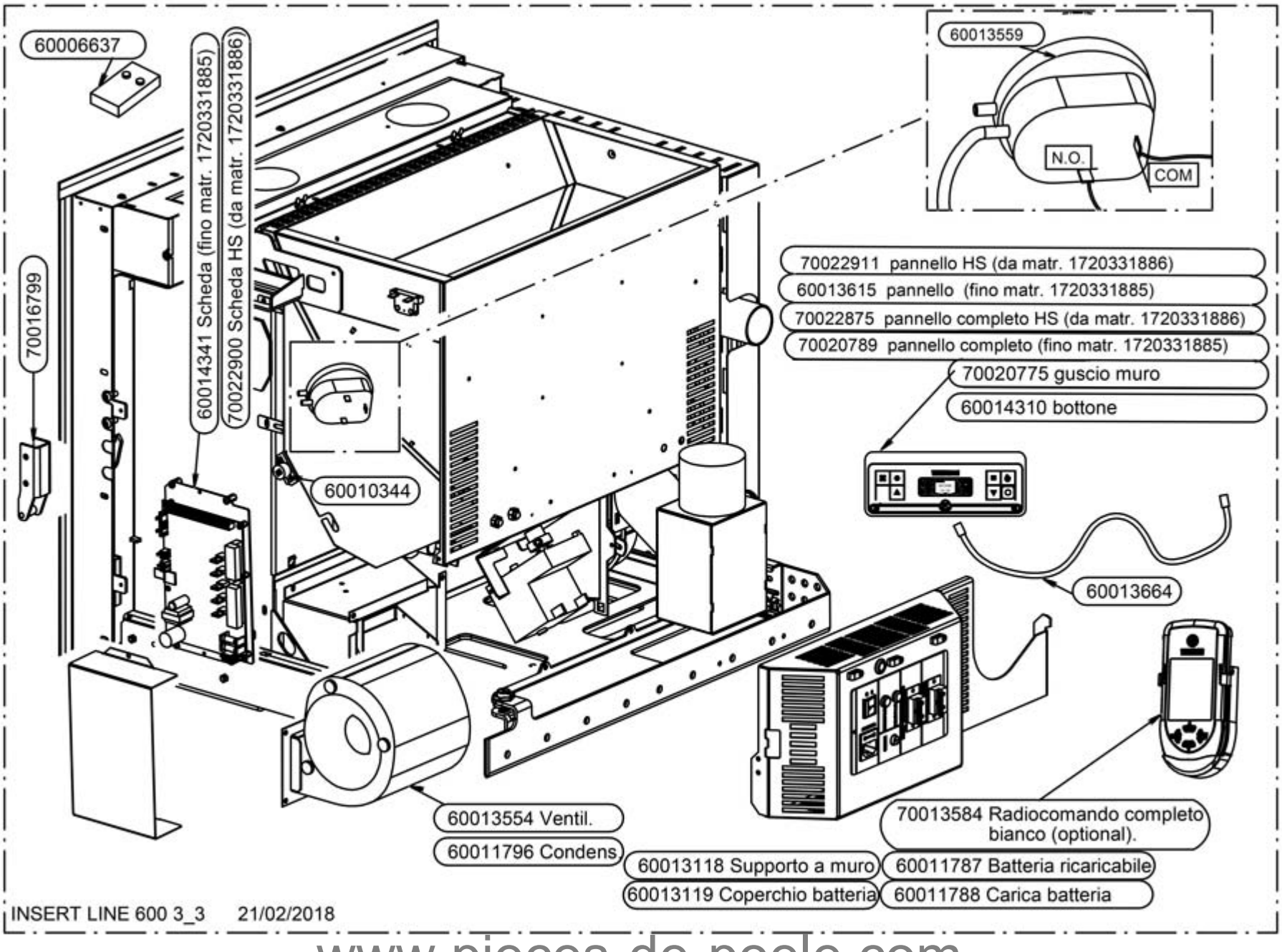

www.pieces-de-poele.com

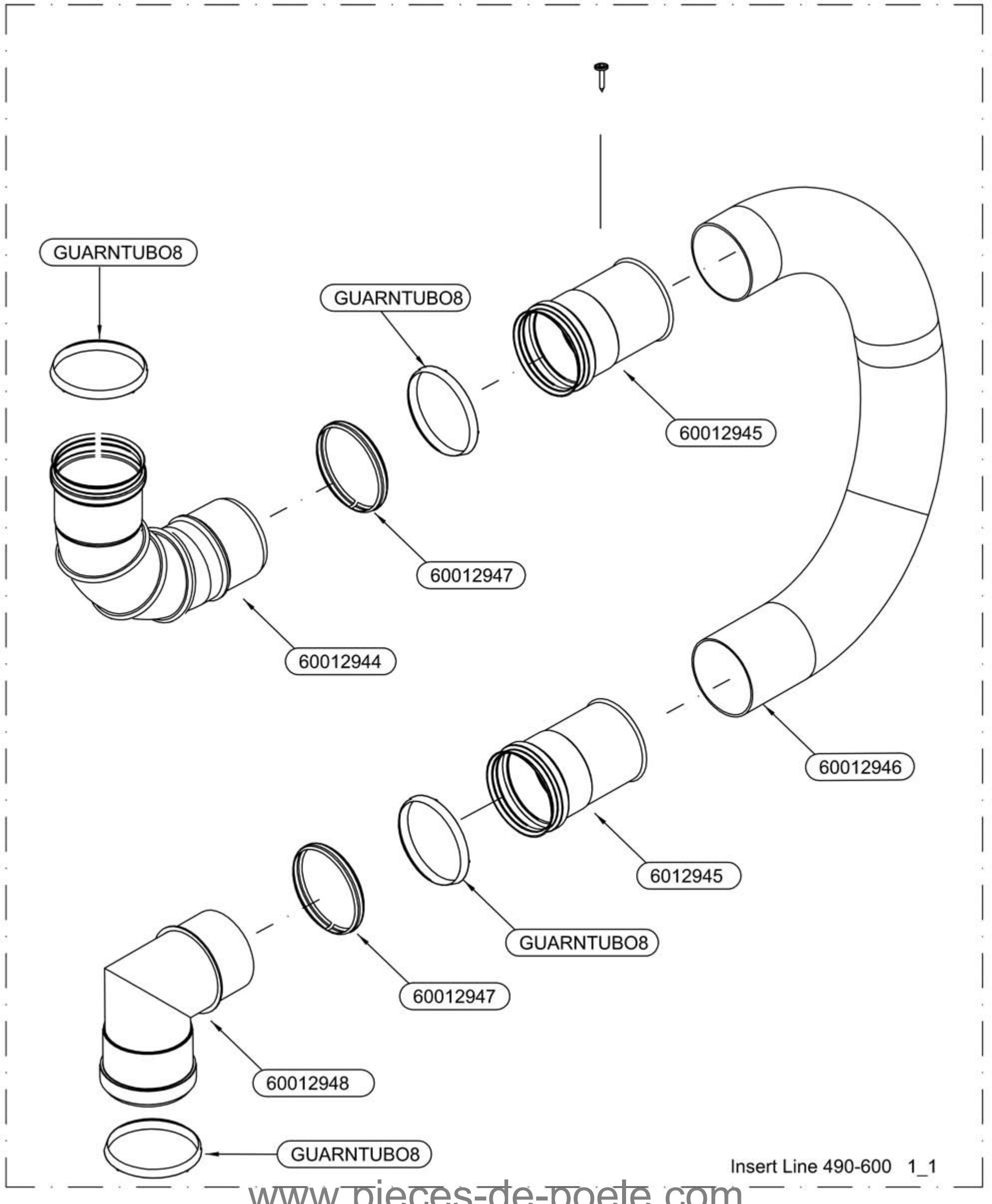

www.pieces-de-poele.com

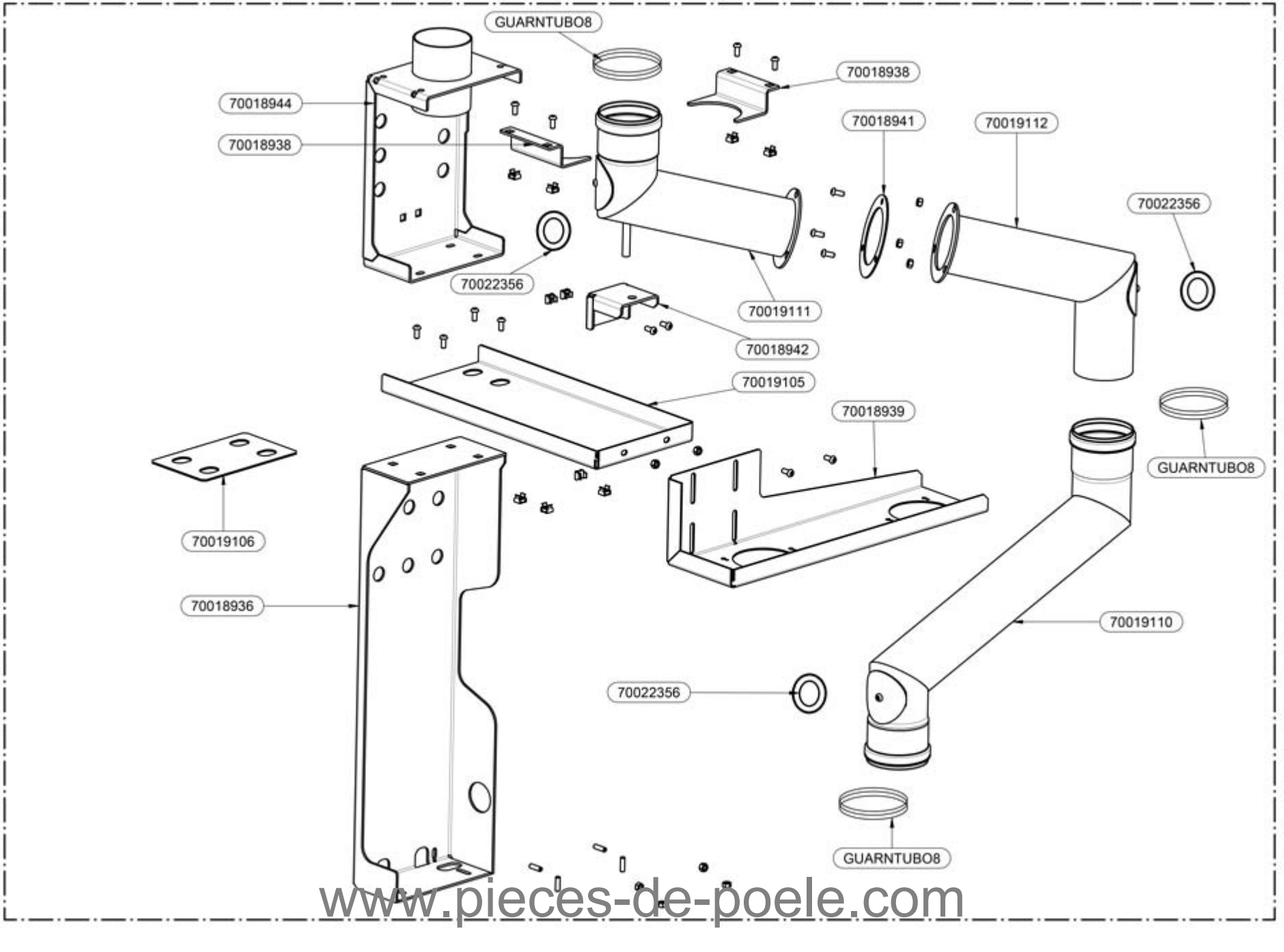

www.pieces-de-poele.com

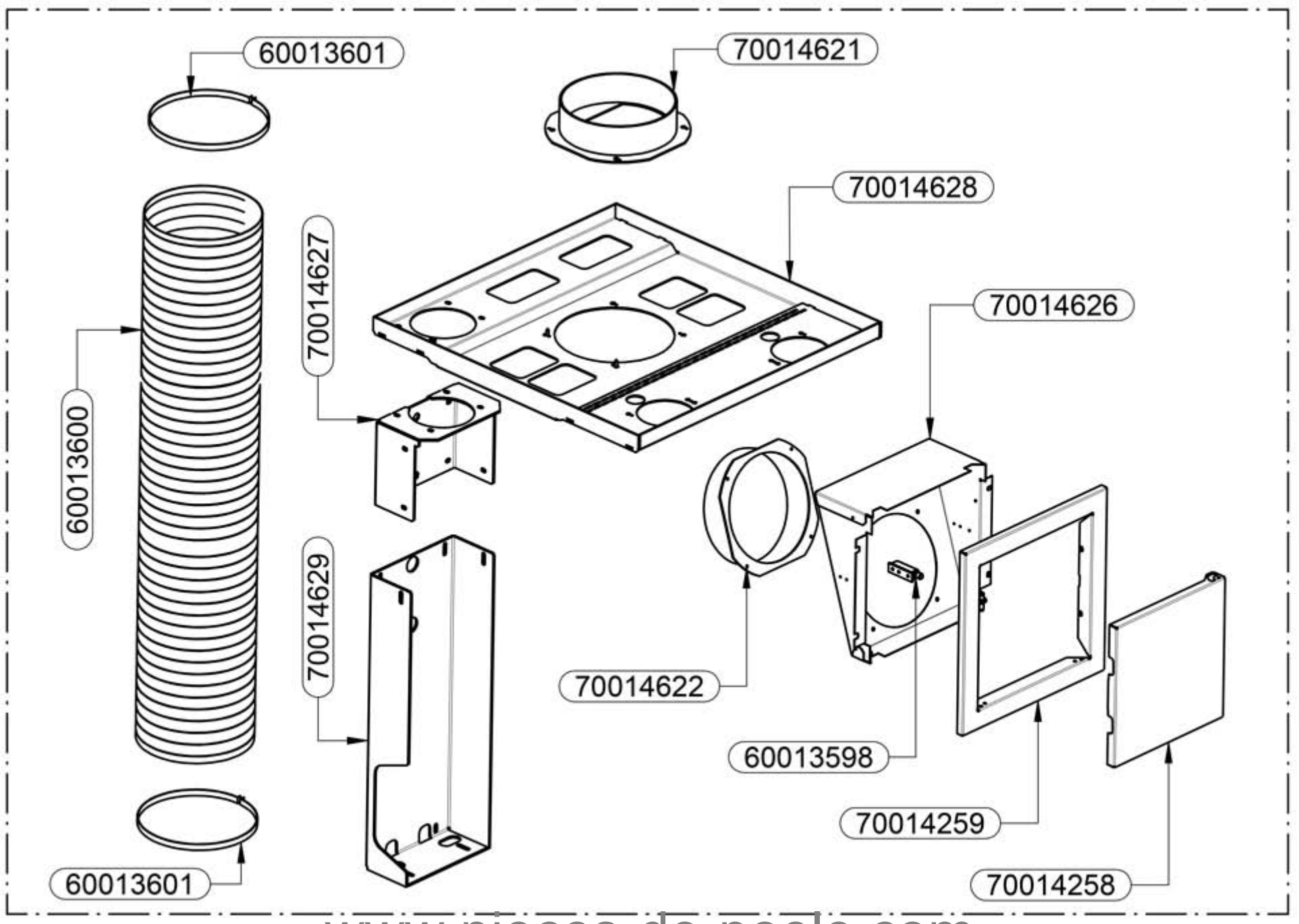

www.pieces-de-poele.com